Φ2.5±20.5mm
Ø2.5
11.8
Ø3.5
2000

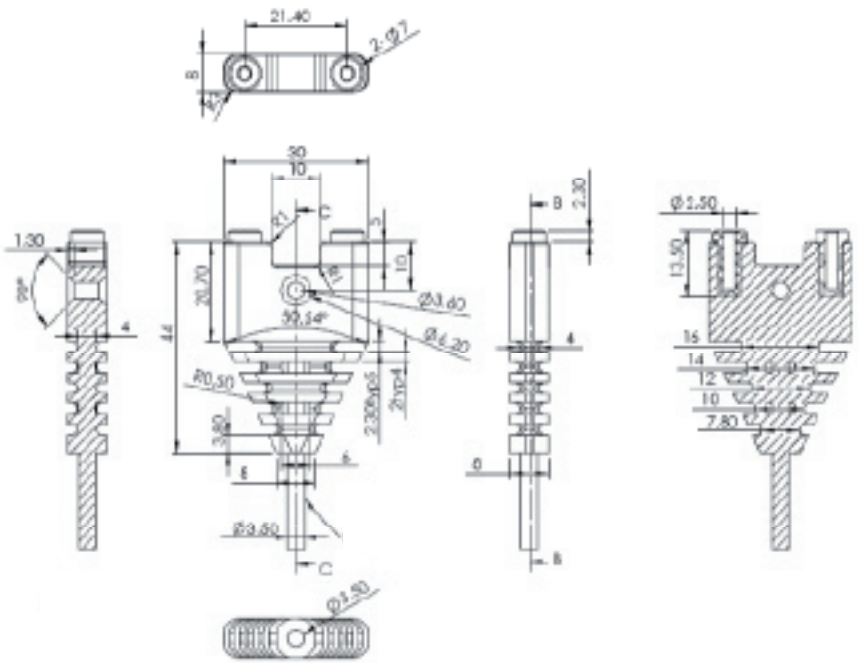
21.40
2-Ø7
30
10
1.30
Ø3.60
Ø6.20
R0.50
Ø3.50
Ø2.50
13.50
16
14
12
10
7.80